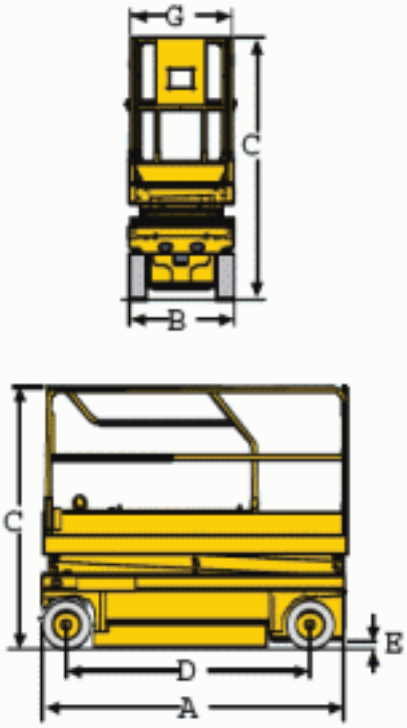
G
C
B
C
E
D
A

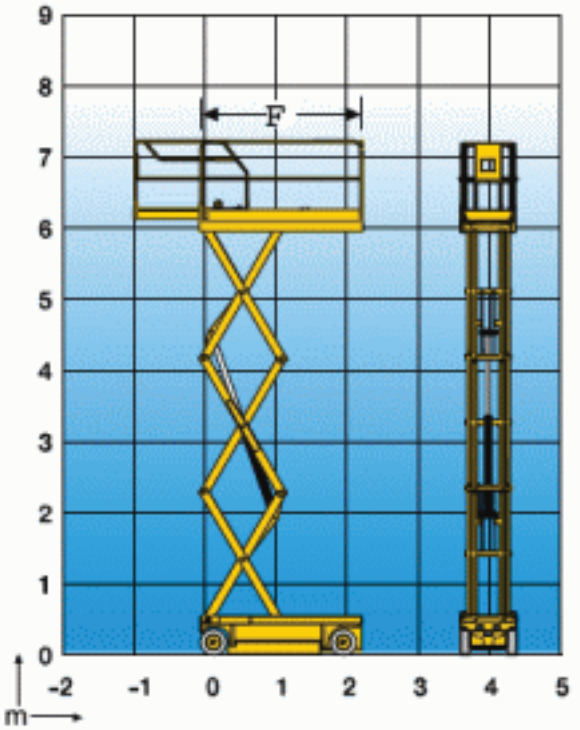
Compact® 8
F
9
8
7
6
5
4
3
2
1
0
-2
-1
0
1
2
3
4
5
m